Pavement Signs / Type Düsseldorf

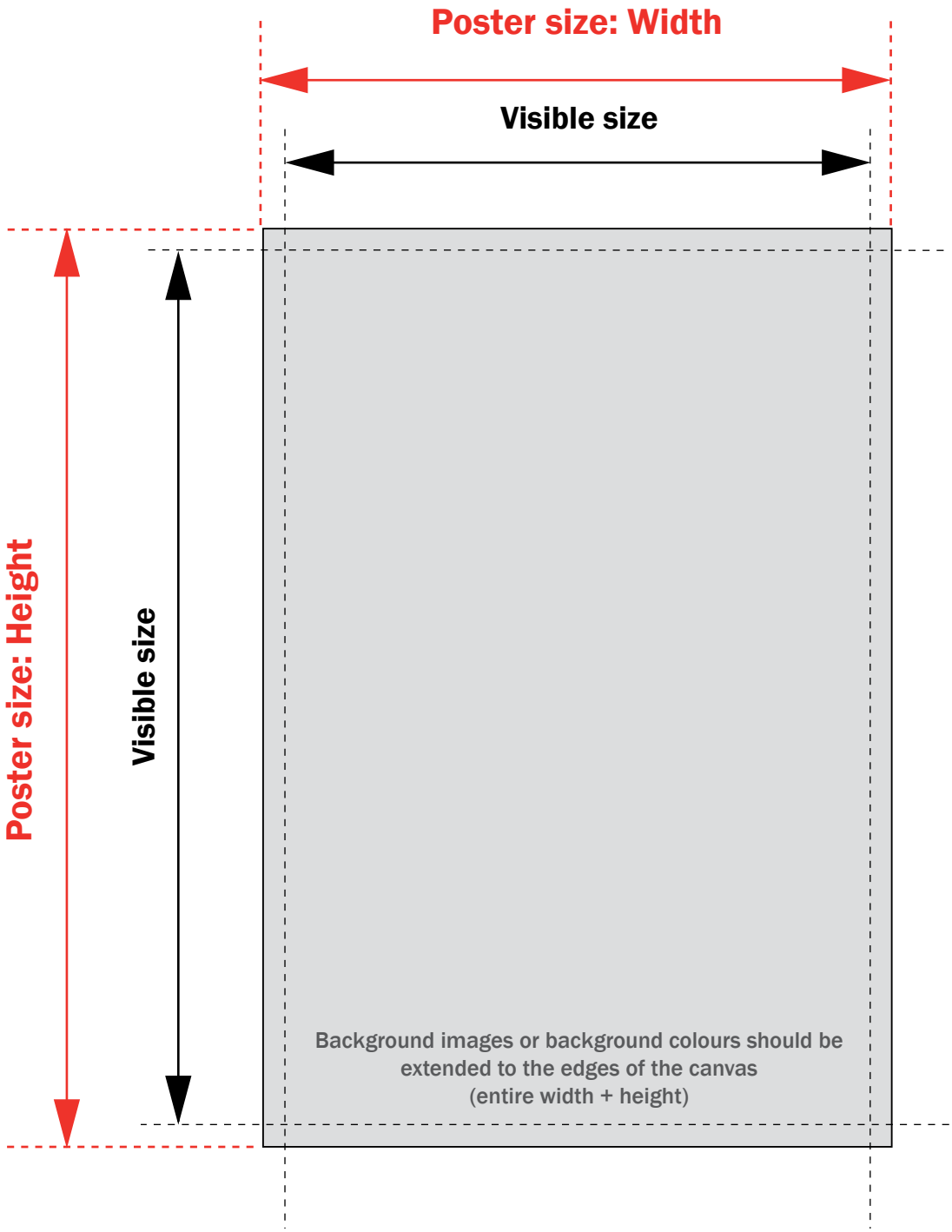

Specifications for submittal of print:

	Poster size	Visible size	Print
A1	594 x 841 mm	586 x 833 mm	2x
A0	841 x 1189 mm	833 x 1181 mm	2x

	Poster size	Visible size	Print
B2	500 x 700 mm	492 x 692 mm	2x
B1	700 x 1000 mm	692 x 992 mm	2x

PDF (printing quality) • Without cutting indications • Transfer text in letter outlines • Scale 1:1

Pavement Signs / Type Düsseldorf

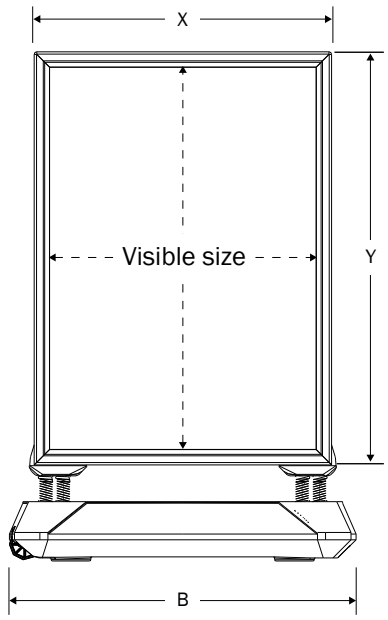

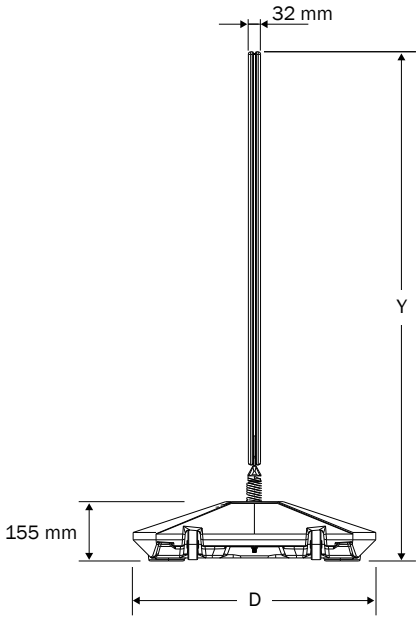

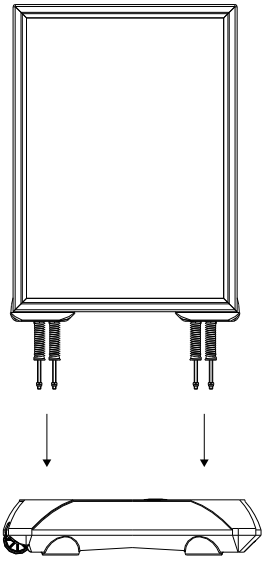

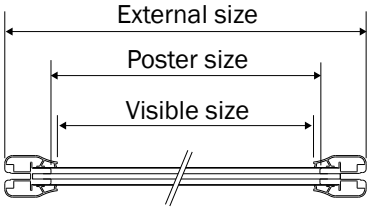

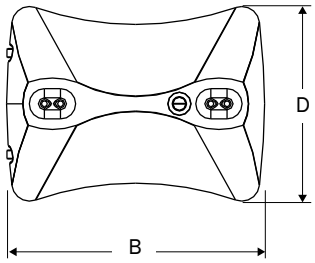

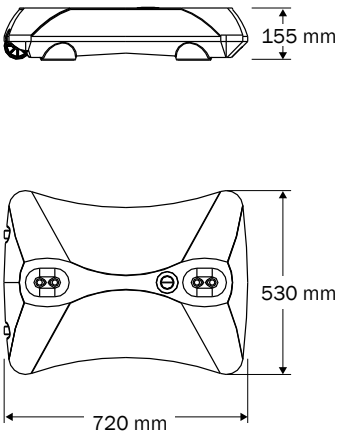

A1 / B2

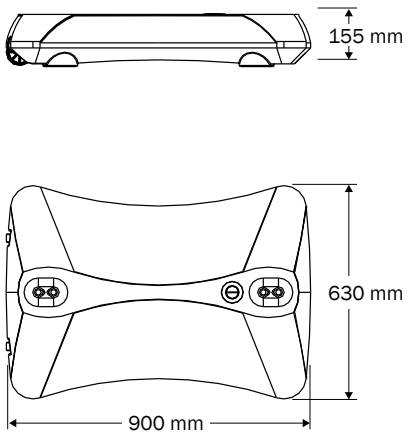

A0 / B1



Size	Poster size	Visible size	External (X-Y)	H	Water tank B	Water tank D	Content	Weight
A1	594 x 841 mm	586 x 833 mm	666 x 913 mm	1168 mm	720 mm	530 mm	24 liter	7,8/4,5 kg
A0	841 x 1189 mm	833 x 1181mm	913 x 1261 mm	1516 mm	900 mm	630 mm	36,5 liter	11,4/6,9 kg
B2	500 x 700 mm	492 x 692 mm	572 x 772 mm	1027 mm	720 mm	530 mm	24 liter	7,2/4,5 kg
B1	700 x 1000 mm	692 x 992 mm	772 x 1072 mm	1343 mm	900 mm	630 mm	36,5 liter	10,5/6,9 kg