Pavement Signs / Type Mainz

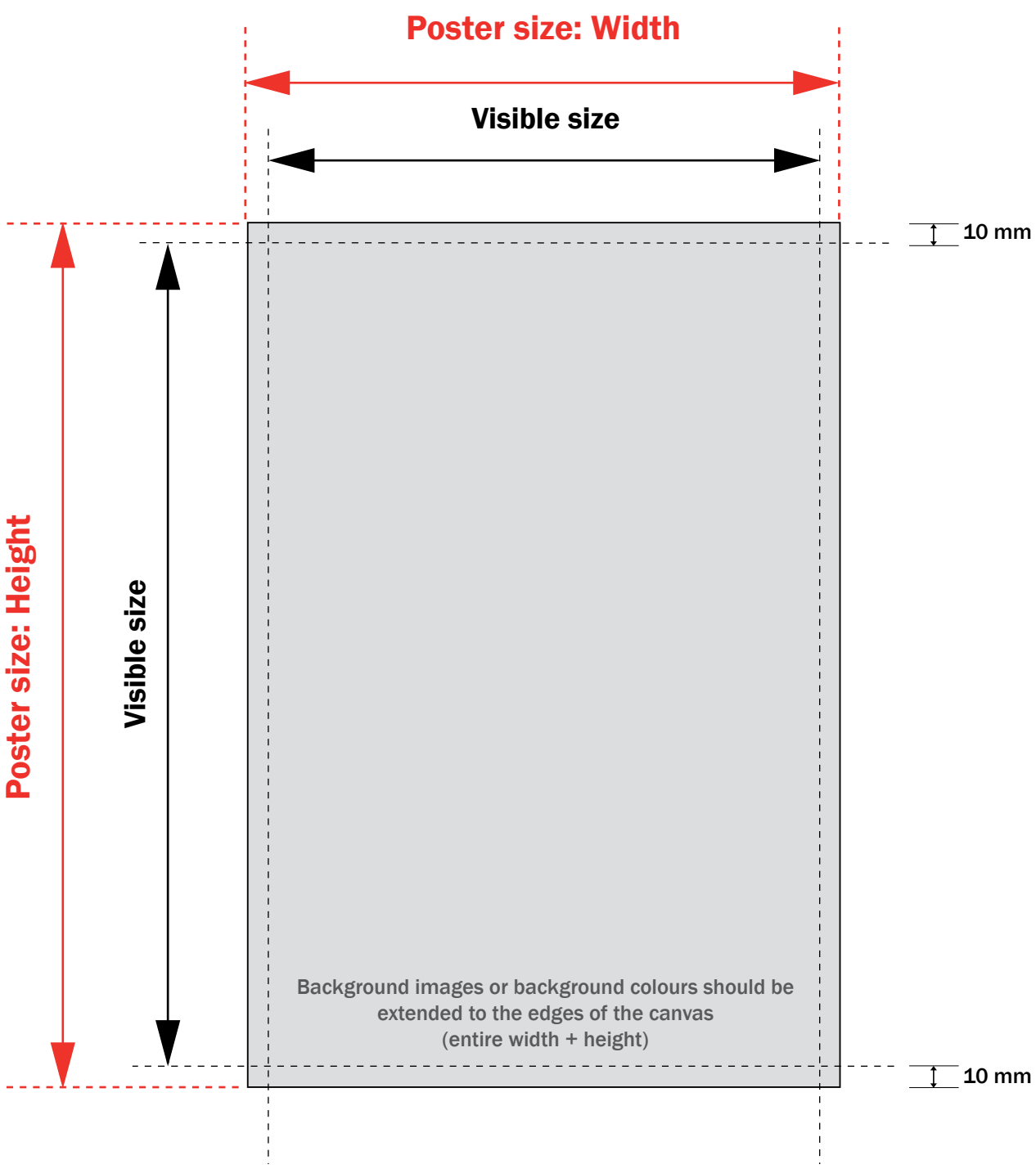

Specifications for submittal of print:

	Poster size	Visible size	Print
A2	420 x 594 mm	400 x 574 mm	2x
A1	594 x 841 mm	574 x 821 mm	2x

	Poster size	Visible size	Print
B2	500 x 700 mm	480 x 680 mm	2x
B1	700 x 1000 mm	680 x 980 mm	2x

PDF (printing quality) • Without cutting indications • Transfer text in letter outlines • Scale 1:1

Pavement Signs / Type Mainz

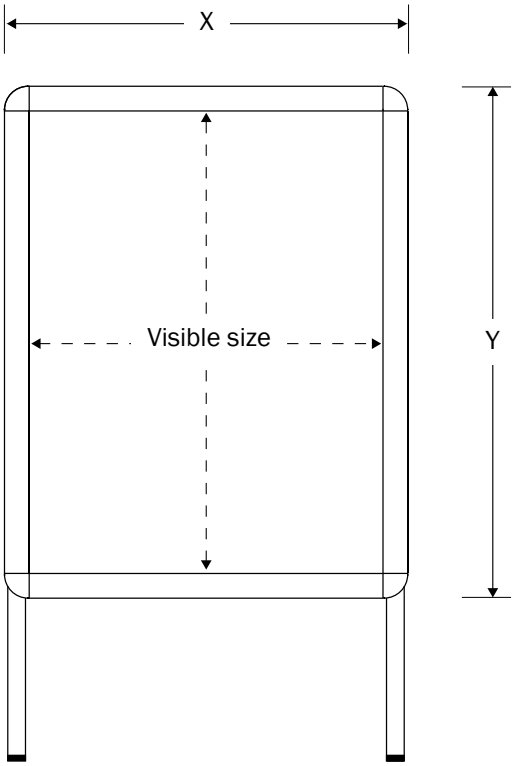

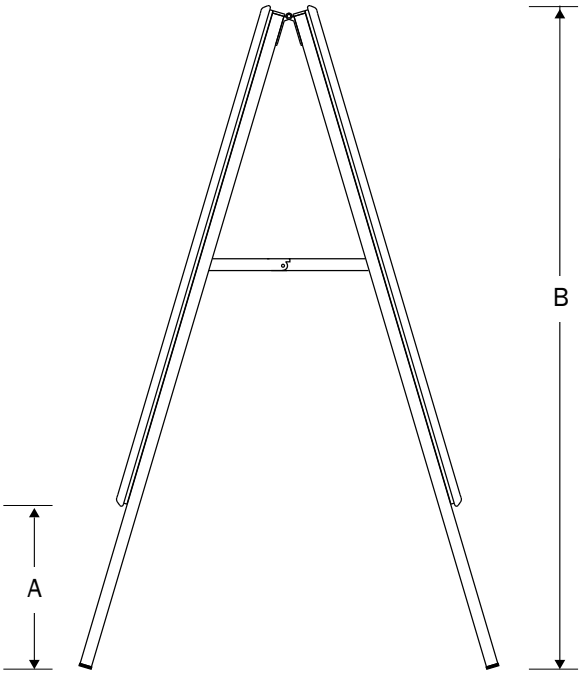

Size	Poster size	Visible size	External (X-Y)	External (A-B)	Weight
A2	420 x 594 mm	400 x 574 mm	465 x 639 mm	290 x 900 mm	5,30 kg
A1	594 x 841 mm	574 x 821 mm	639 x 886 mm	310 x 1500 mm	8,00 kg
B2	500 x 700 mm	480 x 680 mm	545 x 745 mm	280 x 980 mm	6,50 kg
B1	700 x 1000 mm	680 x 980 mm	745 x 1045 mm	320 x 1320 mm	11,00 kg