Pavement Signs / Type Bielefeld

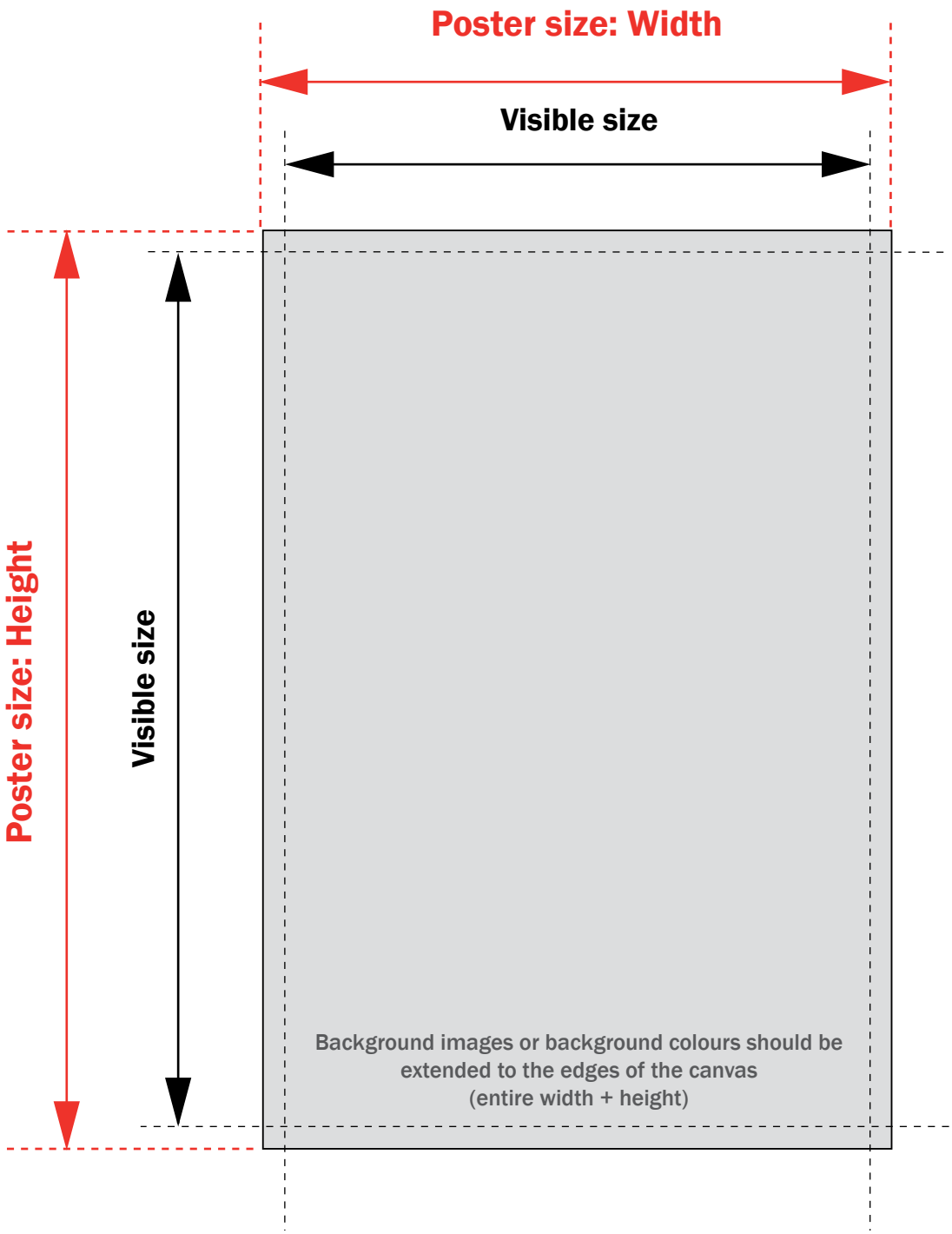

Specifications for submittal of print:

	Poster size	Visible size	Print
A1	594 x 840 mm	588 x 834 mm	2x
A0	840 x 1189 mm	834 x 1183 mm	2x

	Poster size	Visible size	Print
B2	500 x 700 mm	494 x 694 mm	2x
B1	700 x 1000 mm	694 x 994 mm	2x

PDF (printing quality) • Without cutting indications • Transfer text in letter outlines • Scale 1:1

Pavement Signs / Type Bielefeld

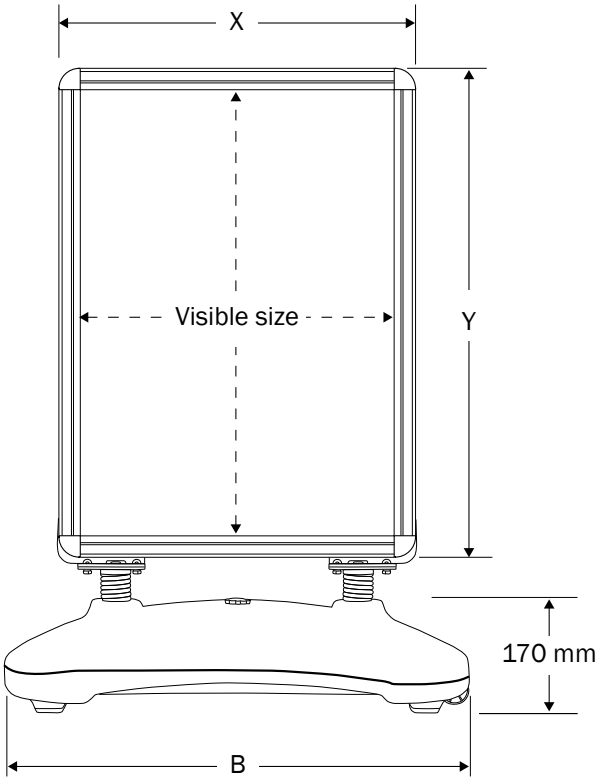

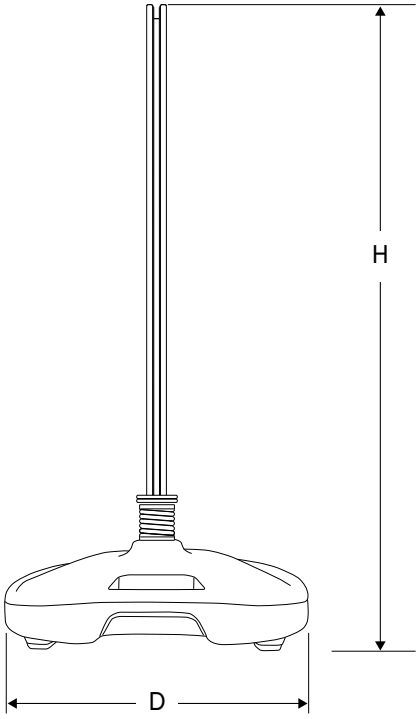

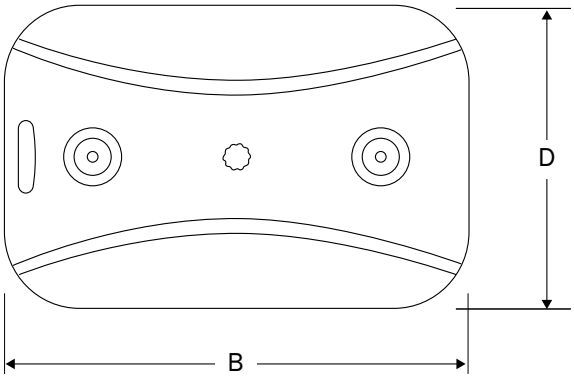

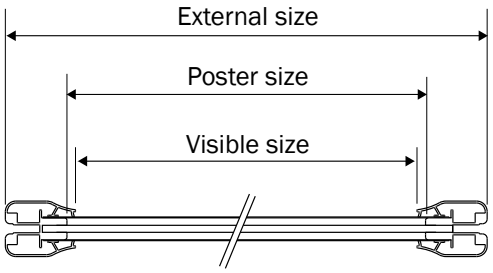

Size	Poster size	Visible size	External (X-Y)	H	Water tank B	Water tank D	Content	Weight
A1	594 x 840 mm	588 x 834 mm	671 x 918 mm	1165 mm	805 mm	520 mm	32 liter	11,69 kg
A0	840 x 1189 mm	834 x 1183 mm	918 x 1266 mm	1530 mm	970 mm	620 mm	58 liter	16,43 kg
B2	500 x 700 mm	494 x 694 mm	577 x 784 mm	1040 mm	805 mm	520 mm	32 liter	11,11 kg
B1	700 x 1000 mm	694 x 994 mm	784 x 1077 mm	1340 mm	970 mm	620 mm	58 liter	14,48 kg